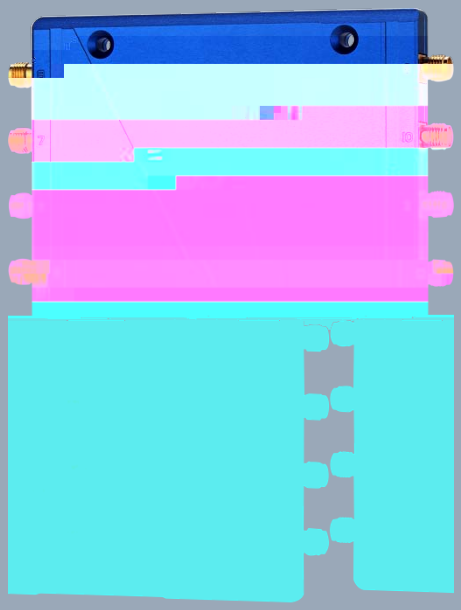

530

HZ530 ISO 18000-6C/6B EPC C1G2 GBT 29768-2013 GJB 7377.1A-2018 ,
TTL-UART DC4.5V 6V
GPIO IO1-IO4 IO1/IO2 IO3/IO4

ISO 18000-6C/6B EPC C1G2 GBT 29768-2013 GJB 7377.1A-2018

, :1dB

RSSI

RFID

RFID

RFID

	+4.5V +6V
	< 20mA
	5V 33dBm 2000mA
	140.3 mm×98.3 mm×4.75 mm
	ISO 18000-6C/6B/EPC C1G2/GBT 29768-2013/GJB 7377.1A-2018
	920 925MHz 902 928MHz 865 868MHz
	35dBm±1dB(MAX)
	±1dB
	-85dBm
RSSI	
	TTL UART (115200bps 8 1)
	SMA
	15PIN 1.25mm
GPIO	2 2 3.3V
	20 70
	45 85
	95% 25

6V

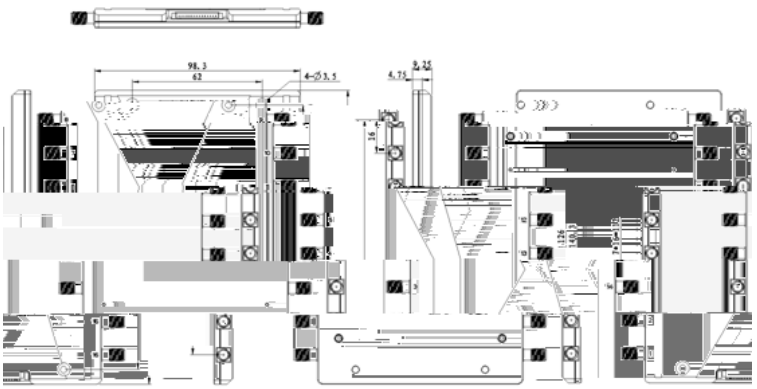

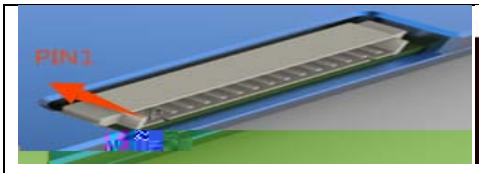

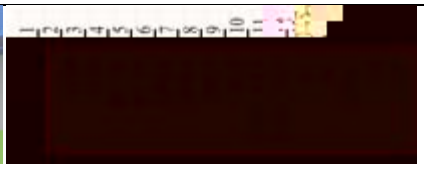

PIN		
1	GND	
2	GND	
3	4.5V-6V DC	
4	4.5V-6V DC	
5	GPIO3	3.3V
6	GPIO4	3.3V
7	GPIO1	3.3V
8	BUZ	3.3V
9	UART_RXD	TTL
10	UART_TXD	
11	NC	NC
12	NC	
13	GPIO2	3.3V
14	EN	
15	NC	NC